PARTS LIST - XG-26MA

BOLT KIT - XG-BRK38

COMPATIBLE GUARDS

CALL: (888) 902-2777 FOR INSTALLATION QUESTIONS OR EMAIL: INFO@EX-GUARD.COM

- Check https://ex-guard.com/

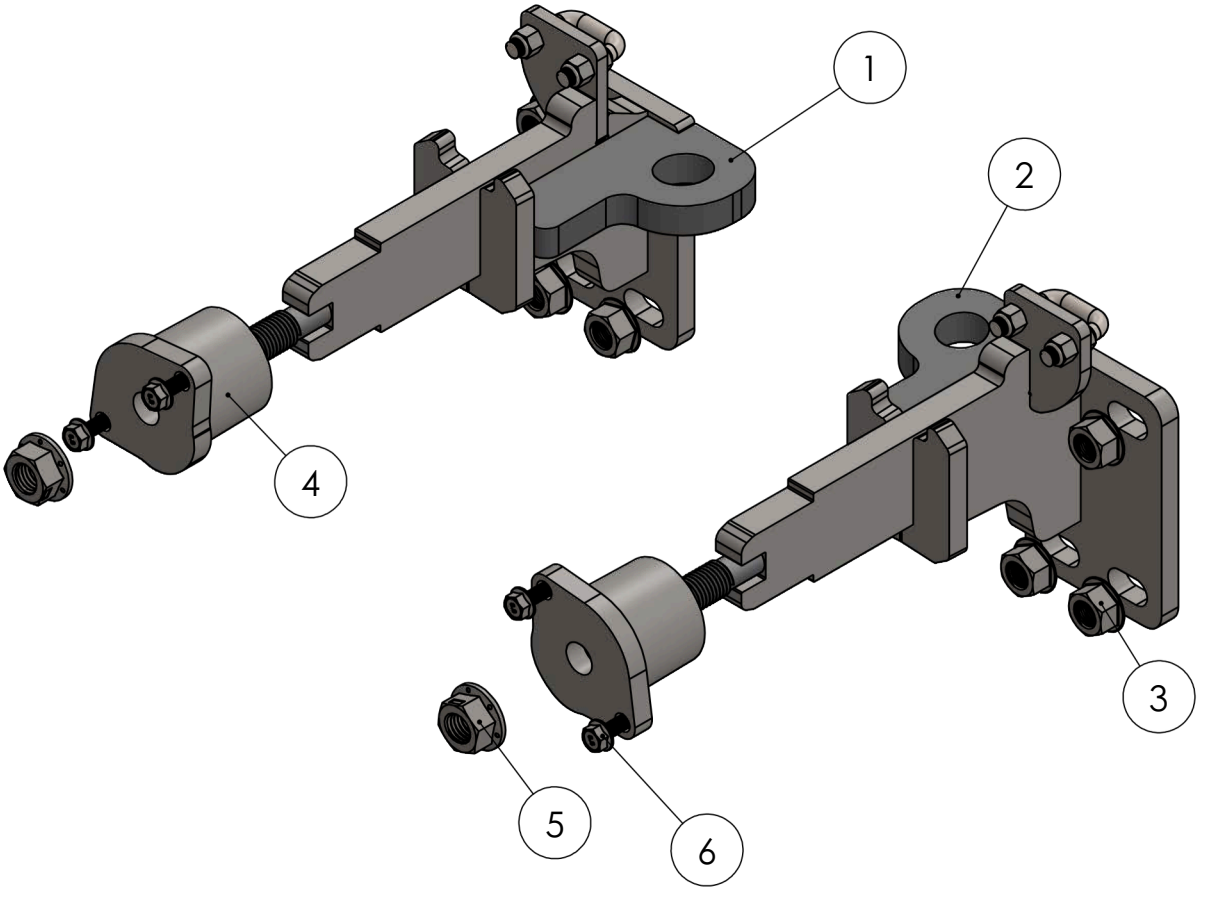

ITEM NO.	PART NUMBER	DESCRIPTION	QTY.
1	XG-26MA-BR10DR XG-26MA-	DRIVER SIDE MOUNTING BRACKET	1
2	BR10PS XG-001-62-	PASSENGER SIDE MOUNTING BRACKET	1
3	11FHHNL5Z XG-26VNL-	5/8-11 FLANGE PATCH HEX NUT	6
4	BR07SA XG-001-75-	26VNL DRIVER SIDE RECIEVER SUPPORT ASSEMBLY	2
5	10FHHNAL8ZY XG-001-M8-	3/4"-10 FLANGE HEX AUTO LOCKNUT	2
6	1.25FHHC308.8Z	M8X30MM FLANGE HEX HEAD CAPSCREW	4

EX-GUARD® SAFE | SMART | STRONG

ATTENTION!! Any Ex-Guard grille guard, bracket kit, or hardware must be used with corresponding Ex-Guard components. Use of any other product or brand with Ex-Guard products will immediately void the warranty provided by Ex-Guard Industries.

©THIS DRAWING IS THE PROPERTY OF EX-GUARD INDUSTRIES, INC. COPYRIGHT IS RESERVED BY THEM AND THE DRAWING ISSUED ON CONDITION THAT IT MUST NOT BE USED FOR ANY OTHER PURPOSE OTHER THAN FOR WHICH IT WAS SUPPLIED AND NOT TO BE COPIED, REPRODUCED, RETAINED OR DISCLOSED TO ANY UNAUTHORIZED PERSON EITHER WHOLLY OR IN PART WITHOUT THE CONSENTIN WRITING OF EX-GUARD INDUSTRIES INC.

STEP 2:
Open the hood of the truck.

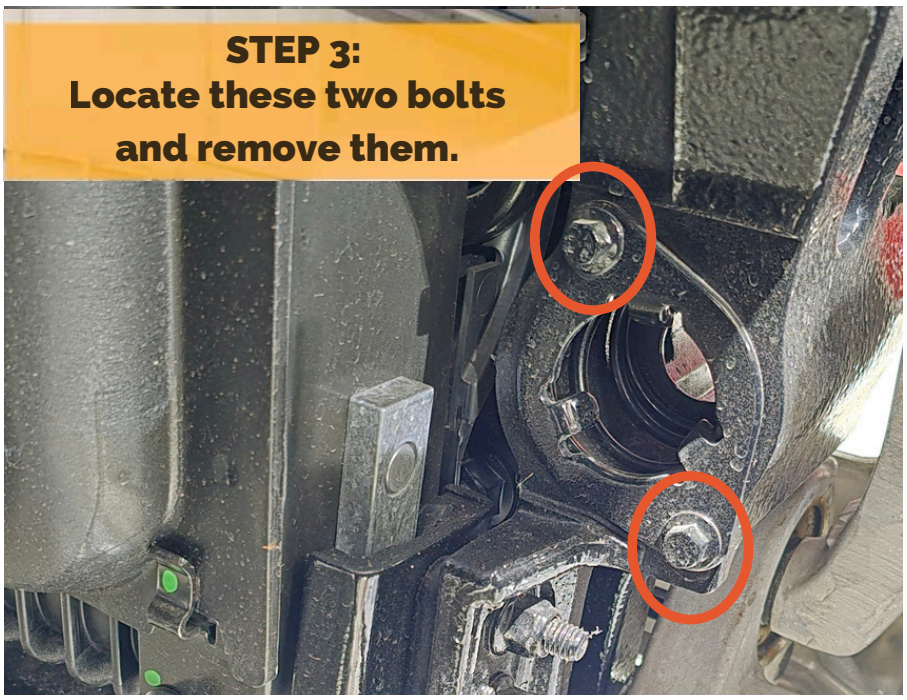

repeat on other side

Open the hood. Make sure brackets are all the way inserted otherwise the hood will not clear.

If the braket is prevented from sitting flush with the towhook reciever (refer to Fig. 1), you may need to grind down the edges of the bracket (refer to Fig. 2).

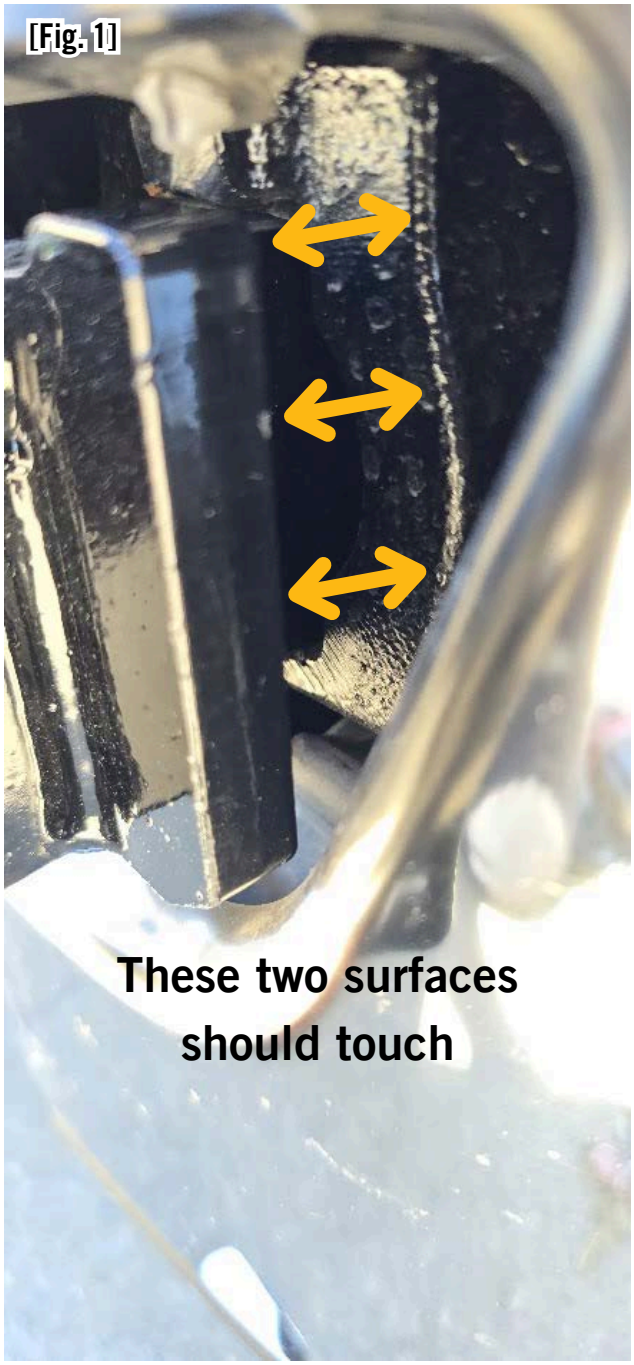

On the backside of the receiver, where the spring was previously removed, insert receiver support assembly.

STEP 10 :
Insert both bolts.

STEP 11:
Torque bolts to
25 ft-lb.
CRAFTSMAN
25.0

STEP 11:
Torque bolts to
25 ft-lb.

STEP 12:
Install flange nuts
leaving 1/8" thread exposed.

STEP 13:
Close the hood.

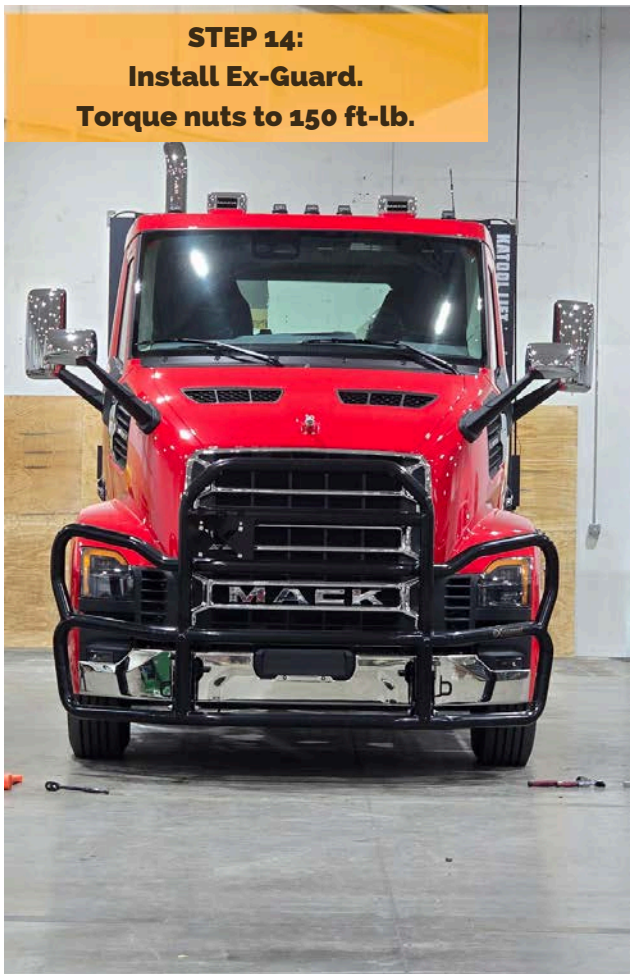
STEP 14:
Install Ex-Guard.
Torque nuts to 150 ft-lb.
MACK

If the hood comes in contact with the brackets, carfully support the hood above the brackets; The hood needs to be adjusted.

If both or one of the brackets attaching the hood to the frame is sitting too far back (refer to Fig. 1, bolts at the front of their slots), loosen the bolts and move the hood forward, away from the cab, until both brackets are correctly positioned (refer to Fig. 2, all bolts at the back of their slots), and the hood clears the brackets. Then, re-torque the loose bolts to factory settings.

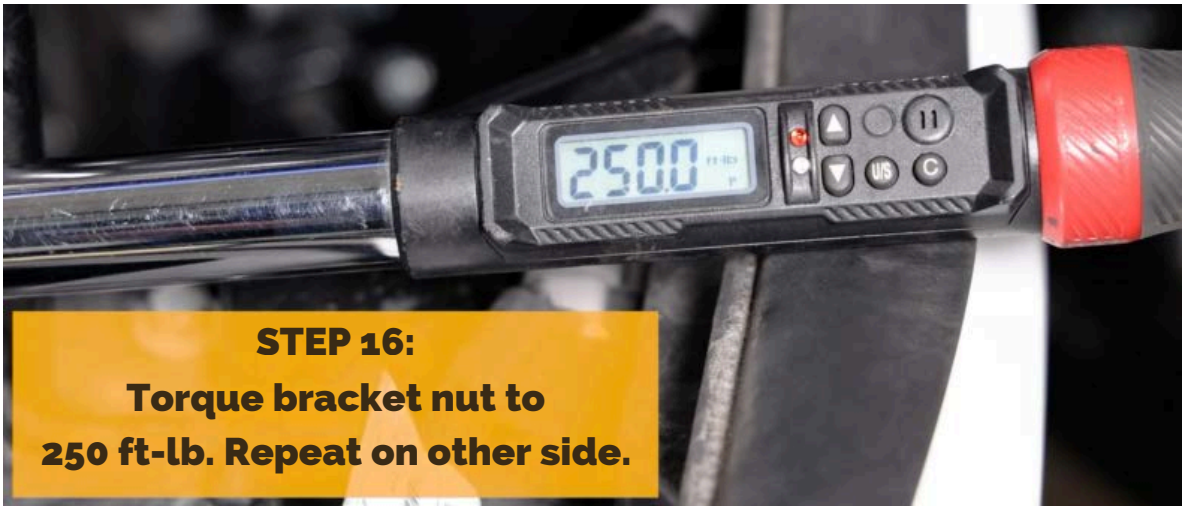
250.0
STEP 16:
Torque bracket nut to
250 ft-lb. Repeat on other side.

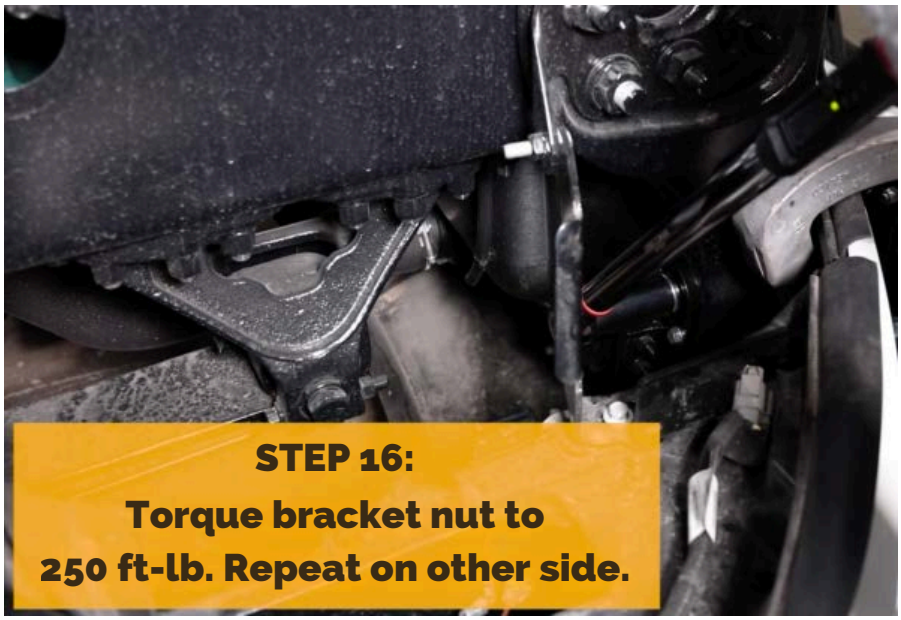
STEP 16:
Torque bracket nut to
250 ft-lb. Repeat on other side.

EX-GUARD® | SERVICE BULLETIN

DESCRIPTION: U-BOLT LATCH ADJUSTMENT

SERIAL NUMBERS AFFECTED: All

U-bolts on all Ex-Guards are factory set at .625 inches [Fig. 1]. Semi truck tow hook receivers may vary from one side to another. This causes Ex-Guard brackets to be uneven once installed, making the tension on either side of the guard unequal and creating a small gap between the U-bolt and the latch hook on one side [Fig. 2].

To correct this, adjust the U-bolt on the tight side (the side with no gap [Fig. 3]) until the tension equalizes.
****Do not adjust the loose side****

To adjust:

1. Loosen the back nuts [Fig. 3 Part A] on the U-Bolt to extend it forward [red arrow].
2. Tighten the jam nuts [Fig. 3 Part B] until they are snug against the subassembly [Fig. 3 Part C].
   {NOTE: Make sure the back nuts are still tight}
3. Firmly rock guard back and forth to ensure that it can no longer move.

PHONE #: (888) 651-1324

[Fig. 1]

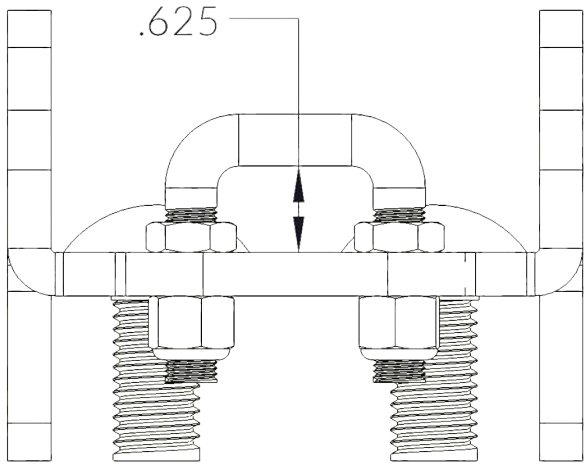

[Fig. 2]
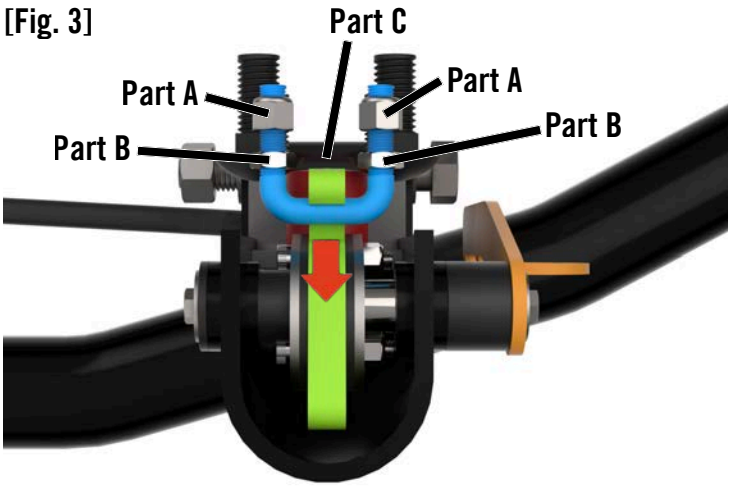
[Fig. 3]